Spec No 编号	SP-RD-012
Version 版本	A/03

PRODUCT SPECIFICATION

产 品 规 格 书

Can Yang COB Series

Standard type

MODEL 型号：CT058-1825A4-**K3

If you have any questions, please contact us before placing an order

阅读后如有任何疑问，请在订购之前联系我们

Customer confirmation 客户确认

General manager 总 经 理	Quality 品 质	Technology 技 术	Purchase 采 购

Explain 说明：

General manager 总 经 理	Sales Representative 销 售 代 表	to examine 审 核	Make 制 作

ATTENTION

OBSERVE PRECAUTIONS
ELECTROSTATIC
SENSITIVE DEVICES

RoHS

Pb Free

地址：广东省深圳市宝安区西乡街道办恒丰工业城 C6 栋 11 楼
Add: 11F Building C6 HenFeng Industrial City XiXiang Street BaoAn District ShenZhen GuangDong China
电话：+86 755-29976909 / 0755-29976979 传真：+86 755-27364953
E-mail:cy@gems-sun.com

Product Nomenclature 产品命名规则

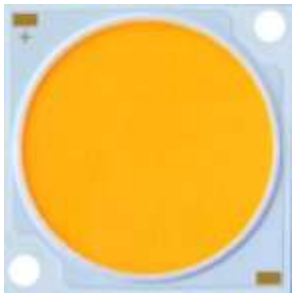

058	-	18	25	A4	27	K3
[1]		[2]	[3]	[4]	[5]	[6]

[1]Product shape	{产品系列}	058
[2]Die count in series	{芯片串联数量}	18
[3]Die count in parallel	{芯片并联数量}	25
[4]CRI (Ra)	{显色指数}	min 80
	Explain: [A1:65 A2:70 A3:75 A4:80 A5:85 A6:90 A7:95]	
[5]Nominal CCT	{标称色温}	2700K
[6]Chip code		{内部芯片代码}

1. Introduction 简介

2. 1-1. Product Description 产品描述

Can Yang Photoelectric is one of the first COB manufacture in our country. Our advanced knowledge and packaging technology for many years, with good reliability and high quality products. Aluminum substrate COB Series covers a wide range of luminous flux from a 10W incandescent bulb to a 500W mercury lamp in general lighting sources. The element arrangement of LED package is capable of utilizing light more effectively and higher performance.

The new version of aluminum substrate COB Series succeed to reduce the thermal resistance significantly. New version creates more options to match luminaire's products design (ex. High performance , Cost effective , Higher lumen density , Increased allowable max. If).

在国内璨阳光电是较早开始生产 COB 的生产企业之一。公司具有专业技术人才团队以及多年的封装技术，从而铸造了高可靠性和高品质的产品。璨阳光电的第三代高品质铝基 COB 系列产品具有相当宽的亮度范围，覆盖了光通量从 10W 的白炽灯泡到 500W 的汞灯等。产品的合理设计与布局使产品在出光效率以及产品的其它性能都有出色的表现。

新版本铝基板 COB 系列产品显著地降低热阻、提升耐温性能。同时也为后续的灯具产品设计提供了更多的匹配选择（如高性能，高性价比，高流明密度，提升了产品最大极限使用电流）。

1-2. Features 特点

- Mechanical Dimensions 产品尺寸 ：38×38×1.5 （mm）
- Package Structure 封装结构 ：Aluminum Base Chip on Board 铝基板 COB
- Reference Assembly 参考组件 ：M3 screw, Connector M3 螺丝、连接压板
- CRI (Ra) 显色指数 ：80Min. 70Min. 最小 80 和最小 70 两种
- Nominal CCT 标准色温 ：2,700K, 3,000K, 3,500K, 4,000K, 5,000K ,6,500K (CRI(Ra) 80Min)
  (3,000K, 4,000K, 5,000K) (CRI(Ra) 70Min)
- Chromaticity Range 色度范围 ：[Min3--5Max] step MacAdam ellipse Optional ANSIC78.377:2011. (CRI(Ra) 80Min)
  ANSI C78.377:2011. (CRI(Ra) 70Min)
- Thermal Resistance 热阻 ：0.14℃/W
- Maximum drive current 最大驱动电流 ：5750mA
- RoHS compliant RoHS 认证
- Better die arrangement for optics 更便于光学设计的晶片布局
- Wide range of luminous flux and high efficacy 极宽的亮度范围和极高光效

2. Performance Characteristics 性能特性

2-1. Electric Optical Characteristics 光电特性

(Tj=85℃)

Product code 产品型号	Nominal CCT 标准色温	CRI 显色指数		Luminous flux 光通量 (LM)			Efficacy 发光效率 (LM/W)	Forward Current 正向电流 (Max)	Voltage 电压 (DC-V)			Thermal Resistance 热阻 Rjc(℃/W)
		Ra	R9	Tj=85C		TC=25℃*						
		Min.	Min.	Min.	Typ.	Typ.	Typ.		Min.	Typ.	Max.	
CT058-1825A4-27K3	2700K	80	0	14283	15035	16706	129	2250	49.5	51.8	55.5	0.14
CT058-1825A4-30K3	3000K	80	0	14837	15618	17353	134	2250	49.5	51.8	55.5	0.14
CT058-1825A4-35K3	3500K	80	0	15169	15967	17742	137	2250	49.5	51.8	55.5	0.14
CT058-1825A4-40K3	4000K	80	0	15280	16084	17871	138	2250	49.5	51.8	55.5	0.14
CT058-1825A4-50K3	5000K	80	0	15169	15967	17742	137	2250	49.5	51.8	55.5	0.14
CT058-1825A4-65K3	6500K	80	0	15834	16667	18519	143	2250	49.5	51.8	55.5	0.14
CT058-1825A2-30K3	3000K	70	-	15944	16783	18648	144	2250	49.5	51.8	55.5	0.14
CT058-1825A2-40K3	4000K	70	-	16719	17599	19555	151	2250	49.5	51.8	55.5	0.14
CT058-1825A2-50K3	5000K	70	-	16387	17249	19166	148	2250	49.5	51.8	55.5	0.14

Notes 注释 :

1. Can Yang photoelectric maintains forward voltage +/-3%, luminous flux +/-10%,Ra and R9 +/-2
   璨阳光电测量误差 正向电压+ / - 3%，光通量+ / - 10%，Ra和R9 + / - 2

2-2. Absolute Maximum Ratings 最大极限参数

Absolute Maximum Ratings 最大极限参数

Parameter 参 数	Symbol 符号	Rating 最大值	
Input Power 输入功率 (W)	Pi	357.9	*1
Forward Current 正向电流 (mA)	If	5750	*1
Reverse Current 反向电流 (mA)	Ir	1	
Operating Temperature 操作温度 (℃)	Top	-40 ~ +100	
Storage Temperature 存储温度 (℃)	Tst	-40 ~ +100	
Case Temperature 基板温度 (℃)	Tc	105	*2
Junction Temperature 结温 (℃)	Tj	140	*3

*1. Input power and forward current are the values when the LED is used within the range of the derating curve in this data sheet.
当调节COB的输入功率和电流值时，请务必按照本规格书中的降额曲线要求进行调整。

*2. Refer to 3. Outline drawing for Tc measurement point.
TC温度测量点的位置请参考本规格书中第3点机械尺寸图。

*3. D.C. Current : Tj = Tc + Rjc × Pi
直流电流：PN结温度 = 基板温度 + 热阻*功率

2-3. Chromaticity Characteristics 色度特性

(Rated current 额定电流, Tj=85℃)

Color Region 颜色区域	Nom inal 标准色温 CCT	Center Point 中心点 (x, y)	Oval parameter 麦克亚当椭圆 参数		
			Major Axis 长轴 a	Minor Axis 短轴 b	Ellipse Rotation Angle 椭圆旋转角度 θ
*3-step # 5-step MacAdam ellipse 麦克亚当椭圆	* 2700K	(0.4577,0.4098)	0.00774	0.00411	57.28
	* 3000K	(0.4339,0.4032)	0.00834	0.00408	53.17
	* 3500K	(0.4078,0.3929)	0.00951	0.00417	52.97
	# 4000K	(0.3818,0.3796)	0.0157	0.0068	53.40
	# 5000K	(0.3446,0.3551)	0.0135	0.0059	59.80
	# 6500K	(0.3123,0.3283)	0.0110	0.0045	58.10

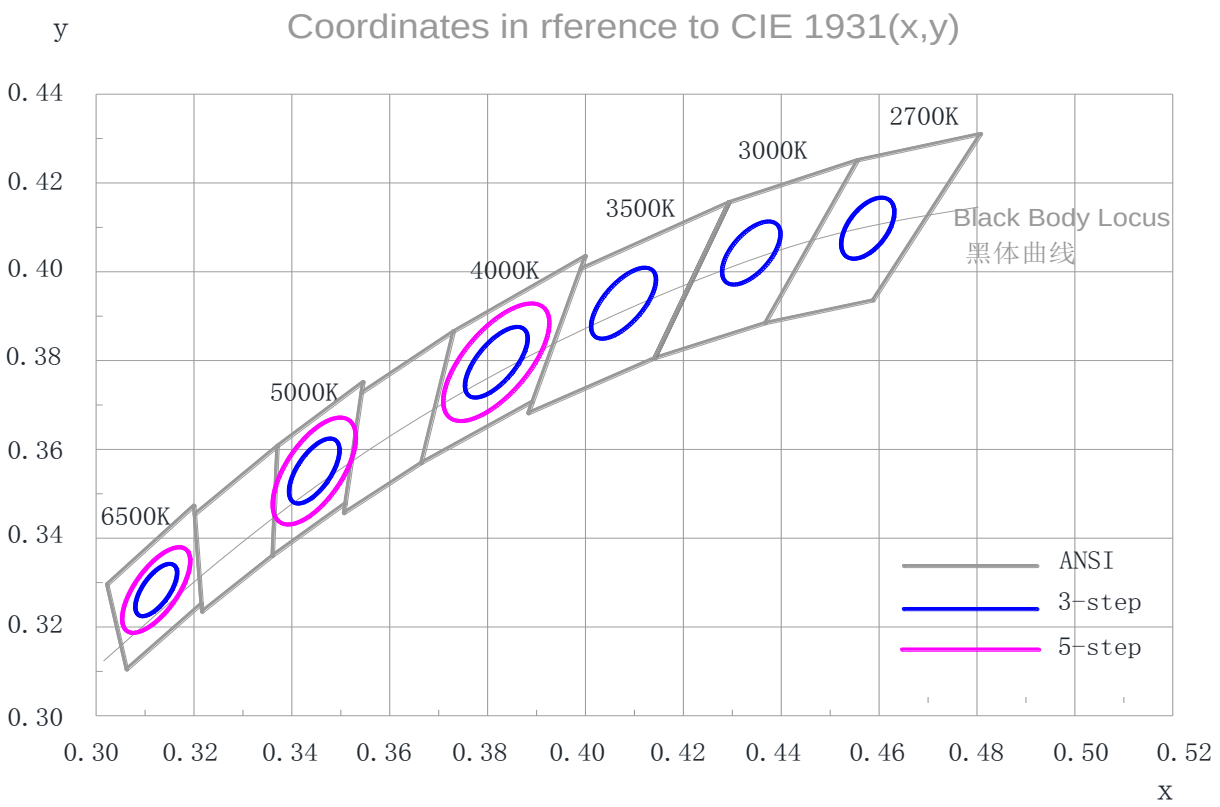

1.* Color region stay within MacAdam 3-step ellipse from the chromaticity center.

Color region stay within MacAdam 5-step ellipse from the chromaticity center.

* 颜色区域保持在 3 步麦克亚当椭圆以内.

颜色区域保持在 5 步麦克亚当椭圆以内.

2.The chromaticity center refers to ANSIC78.377:2011.

色坐标中心值采用 ANSIC78.377:2011 标准.

3.The angle of ellipse between the major axis of the ellipse and the x-axis, and a and b are the major and minor semi-axes of an ellipse. (Ref. IEC 60081:1997 AnnexD).

椭圆旋转角度为椭圆的长轴 a 与坐标系中的 X 轴的夹角，a 和 b 分别为椭圆的长轴和短轴。（参考 IEC 60081:1997 AnnexD）.

3. Mechanical Dimensions 产品外形尺寸

Unit:mm 单位：mm

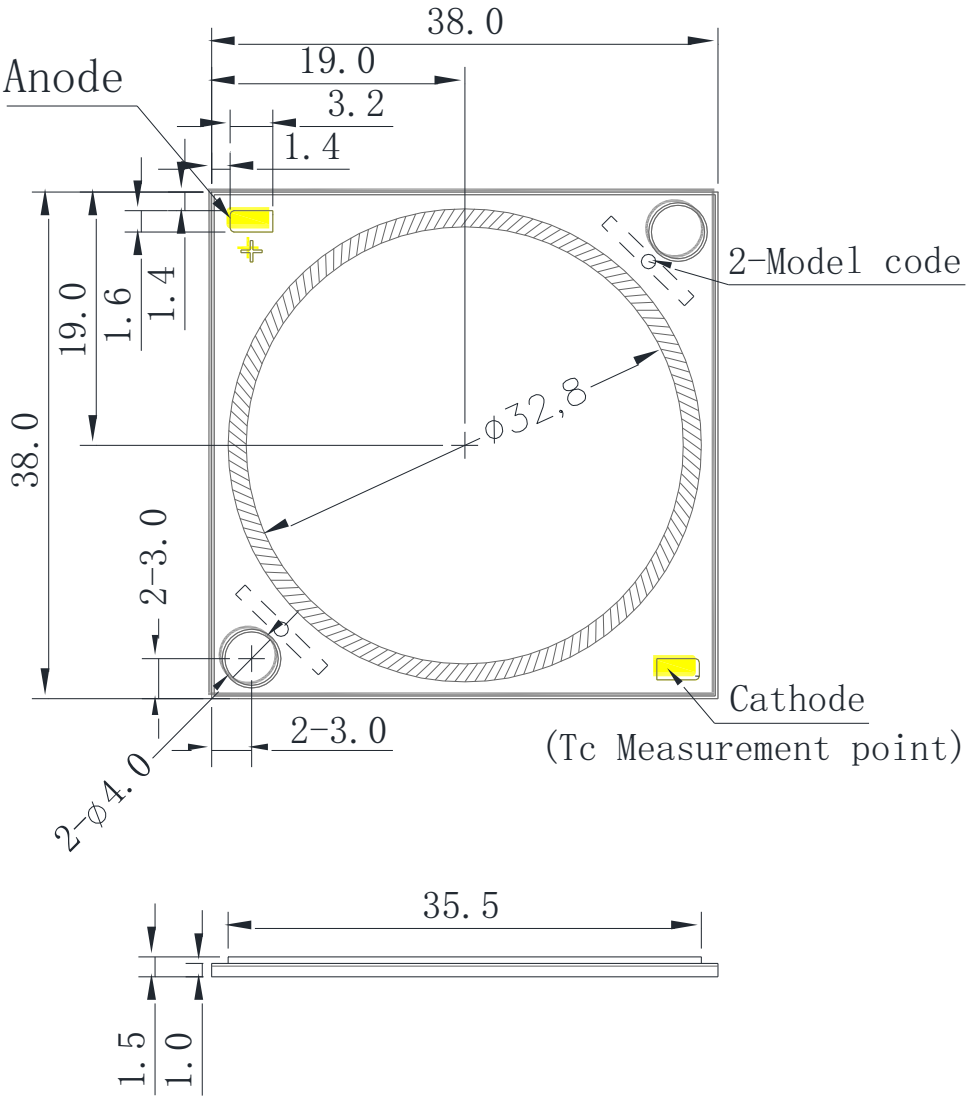

Model code 产品型号

Example 例如：18 25 A4 27 K3

- K3 — Chip晶片
- 27 — CCT色温
- A4 — CRI 显指
- 25 — Dies count in parallel并联晶片数量
- 18 — Dies count in series 串联晶片数量

Suggest application Circuit 建议应用电路

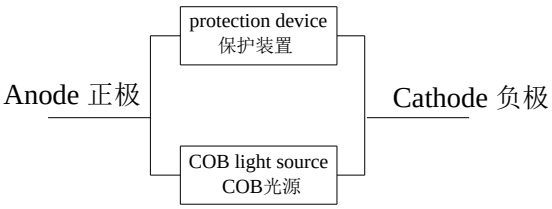

18S 25P 18串25并

4. Characteristic Curves 特性曲线

4-1. Forward Current Characteristics / Temperature Characteristics
正向电流特性/温度特性

Forward Voltage vs Forward Current

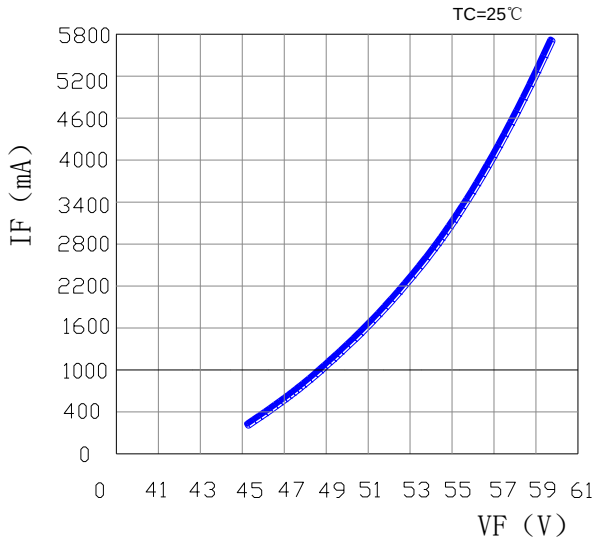

正向电压 VS. 正向电流关系图

Case Temperature vs Forward Voltage

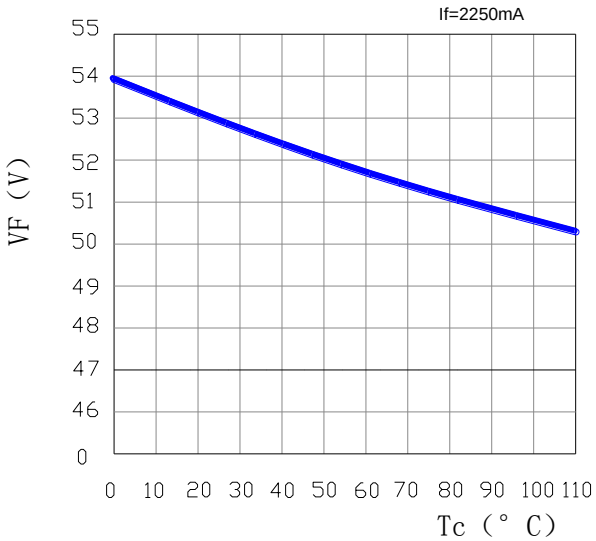

表面温度 VS. 正向电压关系图

Forward Current vs Relative Luminous Flux

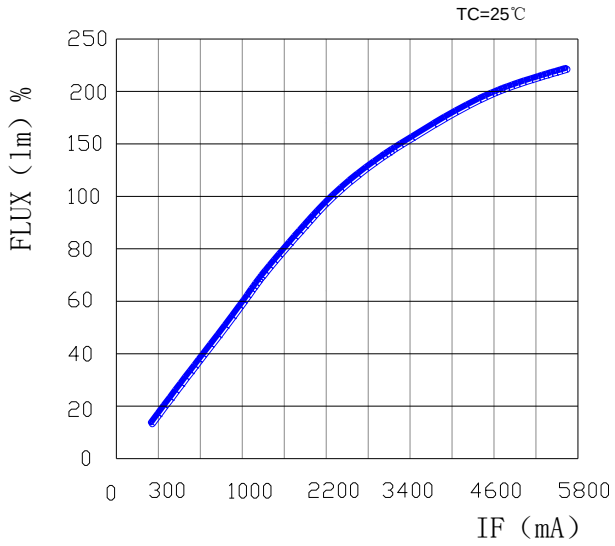

正向电流 VS. 亮度关系图

Case Temperature vs Relative Luminous Flux

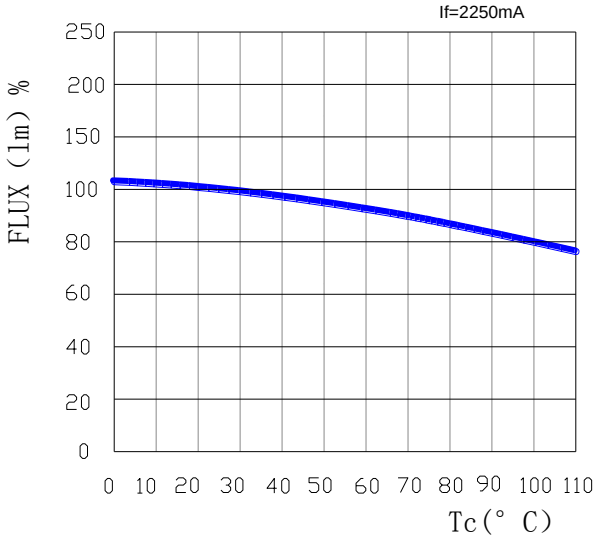

表面温度 VS. 亮度关系图

4-2. Optical Characteristics 光学特性

Spectrum ： CRI(Ra) 80Min. Tj=85℃ If=2250mA

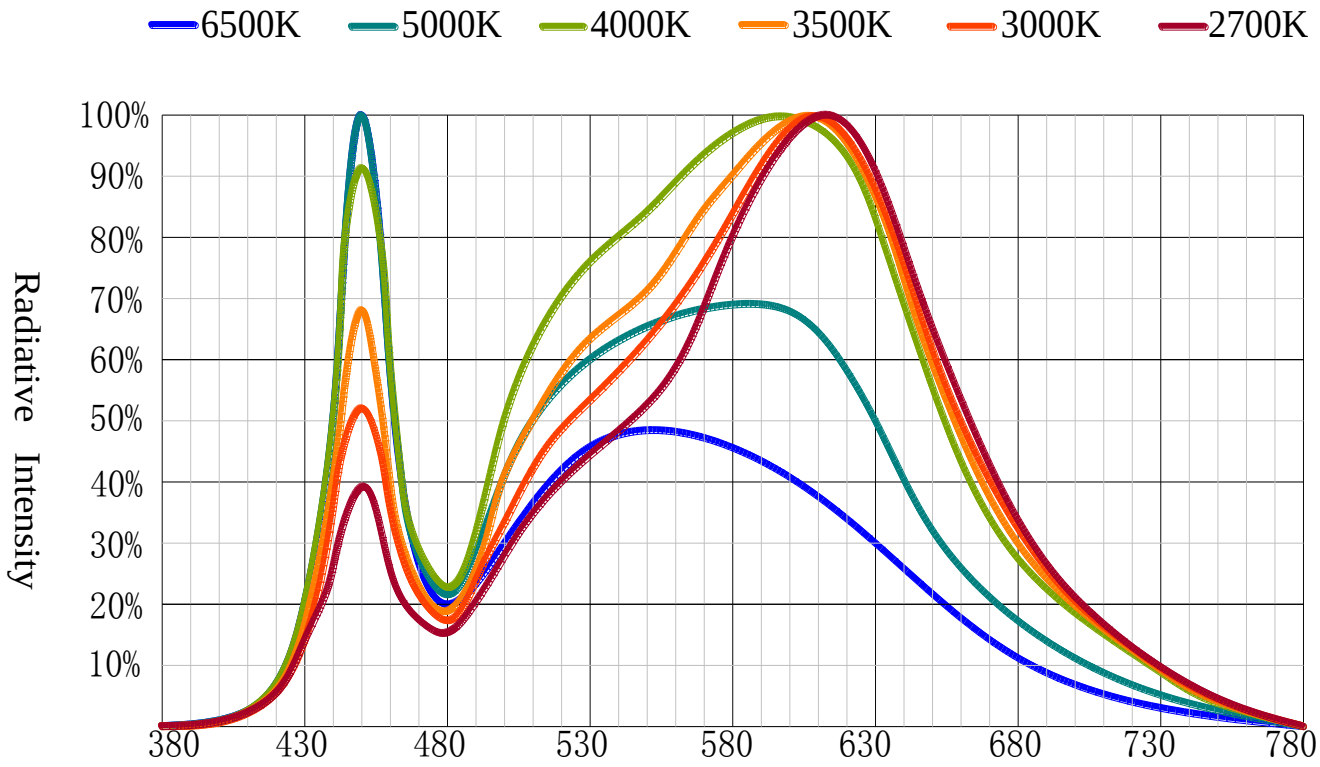

Spectrum ： CRI(Ra)70Min. Tj=85℃ If=2250mA

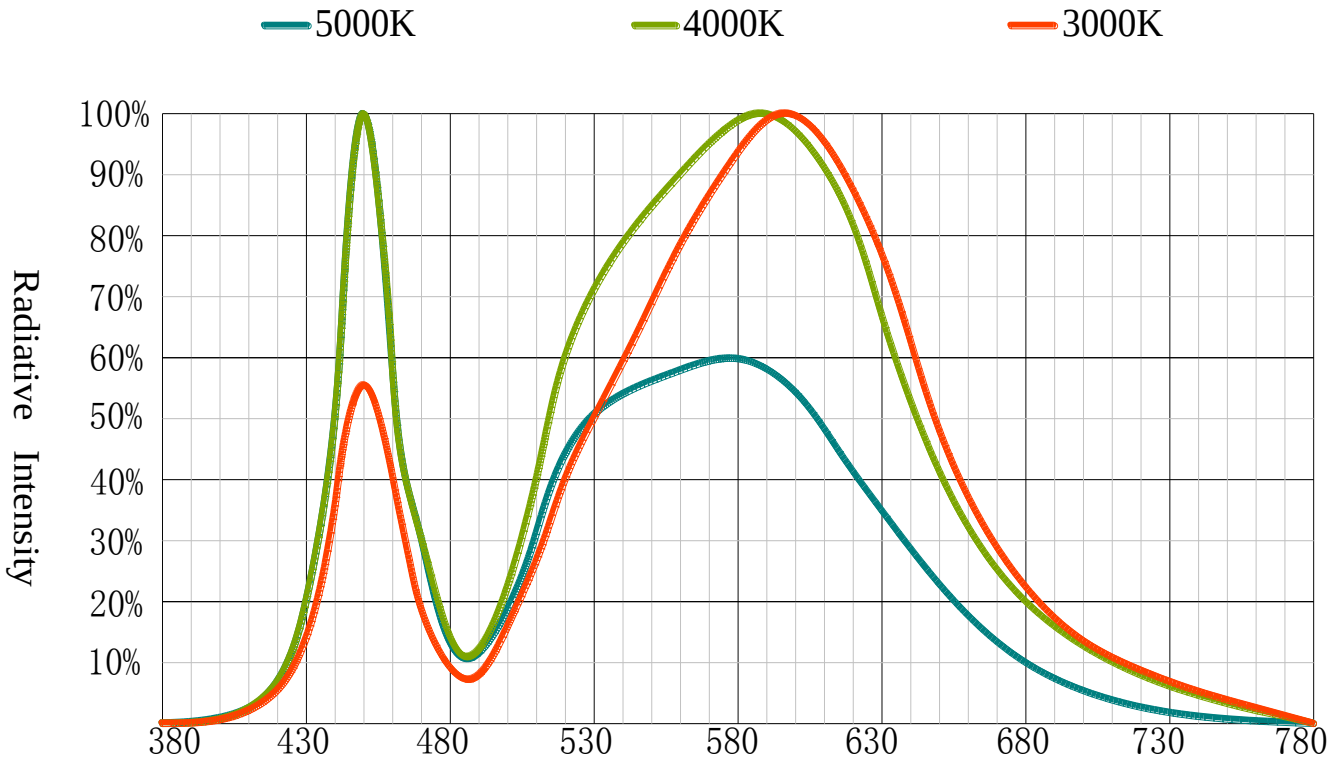

4-2. Optical Characteristics (continued) 光学特性（续）

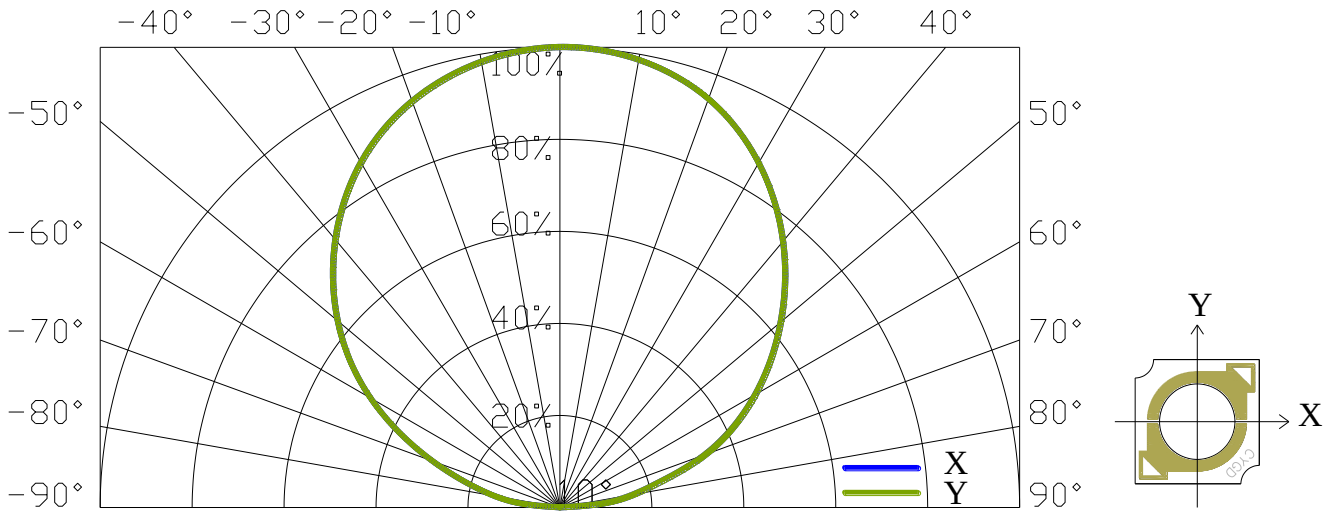

4-3. Derating Characteristics 降额特性

基板温度 **VS.** 允许的正向电流

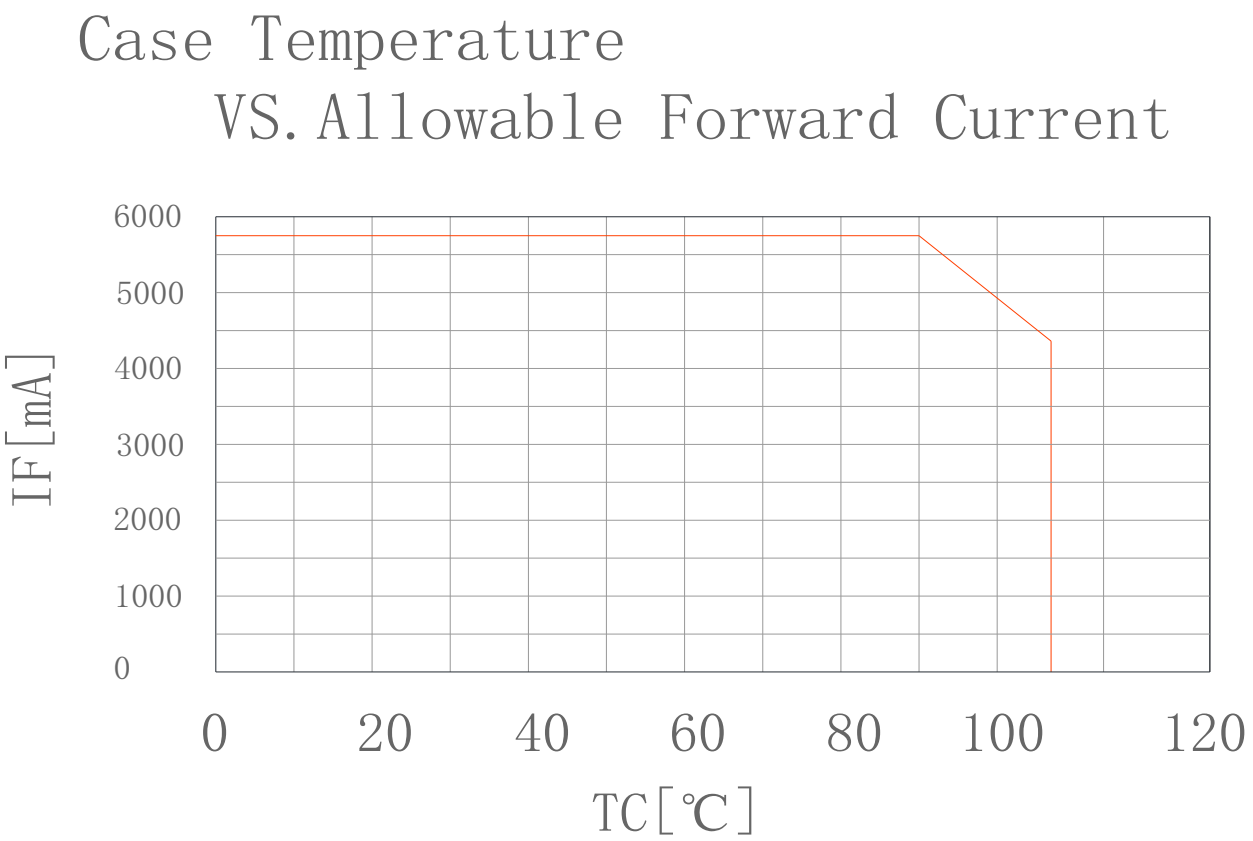

5. Reliability 可靠性

5-1. Reliability Test 可靠性试验

Test Item 测试项目	Test Condition 试验条件
Continuous Operation Test 连续运行试验	IF=2250mA Ta=25℃ (with Al-fin)×1000hrs
	IF=2250mA Tj=140℃ (with Al-fin)×1000hrs
Low Temperature Storage Test 低温贮存试验	-40 ℃ × 1000 hours
High Temperature Storage Test 高温贮存试验	100℃ × 1000 hours
Moisture-proof Test 防潮试验	85 ℃, 85 %RH for 500 hours
Thermal Shock Test 冷热冲击试验	-40 ℃ × 30 minutes-----100 ℃ × 30 minutes, 100 cycle

5-2. Failure Criteria 实验判定标准

(Tc=25℃)

Measuring Item 实验项目	Symbol 符号	Measuring Condition 实验条件	Failure Criteria 判定标准
Forward Voltage 正向电压	Vf	If=2250mA	>U × 1.1
Total Luminous Flux 总光通量	Φv	If=2250mA	<S × 0.85

U defines the upper limit of the specified characteristics. S defines the initial value.
U 为实验前电压的初始值，S 为实验后光通量的值.

Note : Measurement shall be taken between 2 hours and 24 hours, and the test pieces should be return to the normal ambient conditions after the completion of each test.
注释：每个试验完成后试验样品均被放置回正常的环境条件下，并且在 2 到 24 小时内测试完.

6. Packing Specification 包装规格

6-1. Packing 包装

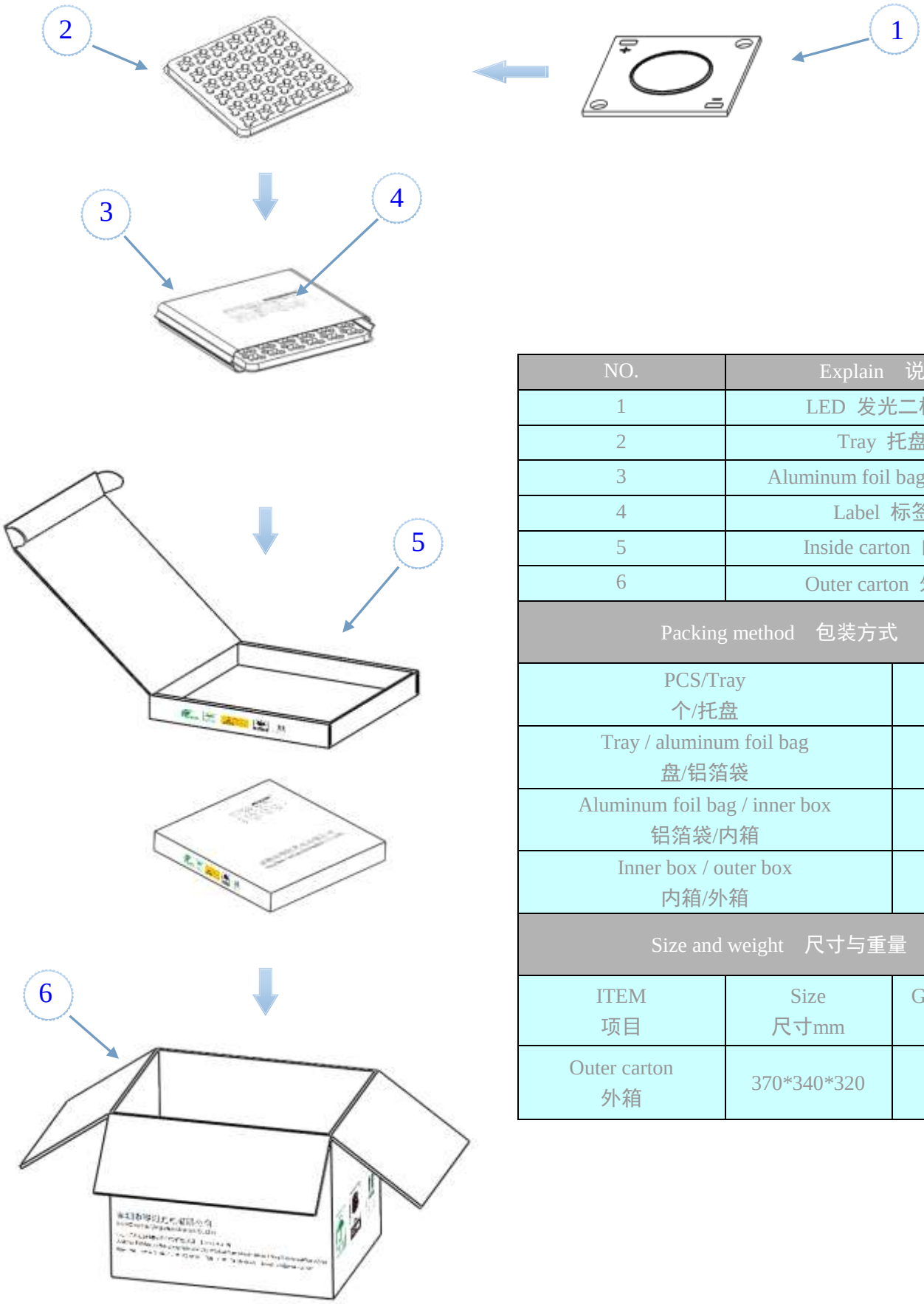

NO.	Explain 说明
1	LED 发光二极管
2	Tray 托盘
3	Aluminum foil bag 铝箔袋
4	Label 标签
5	Inside carton 内箱
6	Outer carton 外箱

Packing method 包装方式	
PCS/Tray 个/托盘	12
Tray / aluminum foil bag 盘/铝箔袋	10
Aluminum foil bag / inner box 铝箔袋/内箱	1
Inner box / outer box 内箱/外箱	4

Size and weight 尺寸与重量		
ITEM 项目	Size 尺寸mm	Gross weight 毛量 kg
Outer carton 外箱	370*340*320	4.7

7. Precaution 使用注意事项

7-1. Handling with care for this product 触碰产品

-Both the light emitting area and white rim around the light emitting area is composed of resin materials. Please avoid the resin area from being pressed, stressed, rubbed, come into contact with sharp metal nail (e.g. edge of reflector part) because the function, performance and reliability of this product are negatively impacted.
-Please be aware that this product should not come into contact with any other parts while incorporating in your lighting apparatus or your other products.

-由于发光区和其周围的白色环形圈都是由软性的树脂材料组成的，所以在拿取产品时该位置应避免被挤压，摩擦或是锋利金属物体碰到（例如 灯具产品上的透镜边缘），反之该产品的功能、性能和可靠性均会受到极大影响。
-请注意在组装成您的成品灯具或是其它产品时，也应注意不能挤压或是刮到此树脂的部份。

7-2. Countermeasure against static electricity 静电防护

-Handling of this product needs countermeasures against static electricity because this is a semiconductor product.
-Please take adequate measures to prevent any static electricity being produced such as the wearing of a wristband or anti-static gloves when handling this product.
-Every manufacturing facility in regard to the product (plant, equipment, machine, carrier machine and conveyance unit) should be connected to ground and please avoid the product to be electric-charged.
-ESD sensitivity of this product is over 1000V (HBM, based on JEITA ED-4701/304).
-After assembling the LEDs into your final product(s), it is recommended to check whether the assembled LEDs are damaged by static electricity (electrical leak phenomenon) or not.
-It is easy to find static damaged LED dies by a light-on test with the minimum current value.

-在使用本产品的过程中需要做相应的静电防护措施，因为本产品为半导体产品。
-请采取足够的措施来防止静电产生，如戴防静电手环或防静电手套等。
-每一个生产设备都必须可靠地接地（如生产设备、量测装置、设备、运输设备等），避免产品被静电击坏.
-本产品的抗静电能力超过 1000V（HBM，基于 JEITA ed-4701 / 304 标准）。
-将发光二极管组装成你的最终产品后，建议您检查 LED 产品是否有被静电损坏（漏电现象）。
-可用一小电流点亮 LED 来检测是否有被静电击坏发光二极管。

7-3. Caution of product assembly 产品装配注意事项

-Regarding this product assembling on the heat sink, it is recommended to use M3 screw.
-It might be good for screw tightening on the heat sink to do temporary tightening and final tightening. In addition, please don’t press with excess stress on the product.
-The condition of the product assembling on the heat sink and the control of screw tightening torque needs to be optimized according to the specification of the heat sink.
-Roughness, unevenness and burr of surface negatively impact thermal bonding between the product and heat sink and increase heat thermal resistance between them.
Confidence of thermally and mechanical coupling between the product and heat sink are confirmed by checking the mounting surface and measuring the case temperature of the product.
-In order to reduce the thermal resistance at assembly, it might be good to use TIM (Thermal Interface Material) on

whole contact surface of the product.

-In case of using thermal grease for the TIM, it might be good to apply uniformly on the contact surface of the product.

-In case of using thermal sheet for the TIM, it might be good to make sure that the product is NOT strained by stress when the screws are tightened for assembly.

-将光源固定于热沉上时，建议使用 M3 的螺丝进行固定。

-对于临时或是最终将 LED 产品固定于热沉上最好使用螺丝进行固定，同时请注意扭螺丝的力度不应过大。

-将本产品装配于热沉上的条件以及螺丝拧紧力矩的控制等需要根据散热片的规格进行优化。

-热沉表面粗糙、不均匀和表面毛边等均会对本产品的散热产生严重影响，导致产品与散热片热阻的增加。本产品装于热沉上的散热效果须通过触摸热沉表面温度或是直接测量本产品的表面温度进行确认。

-为了达到良好的散热效果，组装时在本产品与热沉接触面采用 TIM（导热材料）将有有助于减少热阻。

-假如使用导热硅脂作为导热介质，在本品与热沉接触面涂覆得会比较均匀。

-假如使用导热硅片做为导热介质，需要确认在螺丝拧紧后本品与热沉接触面是否结合紧密。

7-4. Thermal Design 散热设计

-The thermal design to draw heat away from the LED junction is most critical parameter for an LED illumination system. High operating temperatures at the LED junction adversely affect the performance of LED’ s light output and lifetime. Therefore the LED junction temperature should not exceed the absolute maximum rating in LED illumination system. -The LED junction temperature while operation of LED illumination system depends upon thermal resistance of internal -LED package (Rj-c), outer thermal resistances of LED package, power loss and ambient temperature. Please take both of the thermal design specifications and ambient temperature conditions into consideration for the setting of driving conditions.

-在灯具系统中，优良的散热设计就是将 LED PN 结产生的热量尽可能多的通过热沉传递出去。PN 结的温度过高将严重地影响 LED 的性能、光输出以及产品寿命。因此 LED 结温不应超过灯具系统中所规定的极限值。LED 结温的高低灯具由系统中的热阻决定。

-LED 封装（Rjc）外部热阻，功率流失和环境温度。在设计 LED 驱动条件时，请将散热设计和环境温度都考虑进去。

7-5. Driving Current 驱动电流

-A constant current is recommended as an applying driving current to this product.

-In the case of constant voltage driving, please connect current-limiting resistor to each products in series and control the driving current to keep under the absolute maximum rating forward current value.

-Electrical transient might apply excess voltage, excess current and reverse voltage to the product(s). They also affect negative impact on the product(s) therefore please make sure that no excess voltage, no excess current and no reverse voltage is applied to the product(s) when the LED driver is turn-on and/or turn-off.

-本产品推荐使用恒流源进行驱动。

-假如使用恒压驱动，请连接好限流电阻并确保使用的电流在产品最大允许电流范围内使用。

-瞬间开关电源可能会产生超过 LED 规定使用的正向电压、正向电流和反向电压会对 LED 产生不良影响，因此请采取措施确保加在 LED 两端的电压与电流在正常范围内。

7-6. Recommended soldering Condition (This product is not adaptable to reflow process.)
推荐焊接条件（本产品不宜用回流焊接）

-For manual soldering

Please use lead-free soldering.

Soldering shall be implemented using a soldering bit at a temperature lower than 350℃, and shall be finished within 3.5 seconds for one land.

No external force shall be applied to resin part while soldering is implemented.

Next process of soldering should be carried out after the product has return to ambient temperature.

Contacts number of soldering bit should be within twice for each terminal.

* CanYang Photoelectric cannot guarantee if usage exceeds these recommended conditions. Please use it after sufficient verification is carried out on your own risk if absolutely necessary.

-手动焊接

请使用无铅焊料进行焊接。

手动焊接时，请确保烙铁头的温度低于 350℃，同时每一次焊接时间请控制在 3-5 秒以内。

焊接过程中请不要按压产品的树脂部份，以免对产品造成损坏。

同一焊点连续两次焊接时，请在第一次焊接完成且产品温度已回到室温后方可进行。

同一焊点的焊接应该控制在二次以内完成。

*如果在璨阳光电建议的焊接条件以外进行焊接产品可能会存在品质风险。如果仍要使用请充分评估好此操可能带来的风险。

7-7. This product is not designed for usage under the following conditions.
本产品不适合应用于以下方面

If the product might be used under the following conditions, you shall evaluate its effect and appropriate them. In places where the product might:

-directly and indirectly get wet due to rain and/or at place with the fear.

-be damage by seawater and/or at place with the fear

-be exposed to corrosive gas (such as Cl2, H2S, NH3, SOx, NOx and so on) and/or at place with the fear.

-be exposed to dust, fluid or oil and/or at place with the fear.

如果该产品在以下这些方面使用时请进行有效性有适宜性的评估，这些方面包括：

-直接或间接被淋雨的环境中。

-有可能被海水打湿到的环境中。

-有可能带有腐蚀性气体的环境中（如氯、硫化氢、氨、硫的氧化物、氮氧化物）。

-有可能产生灰尘、液体或油污的环境中。